# SEALS+DIRECT

www.sealsdirect.co.uk

| DESCRIPTION | ORDER CODE |
|---|---|
| CARAVAN / MOTORHOME OPENING WINDOW SEAL LARGE BULB C/W WHITE INSERT | **CS 784W** |

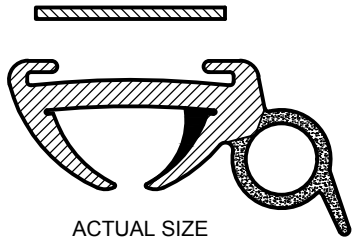


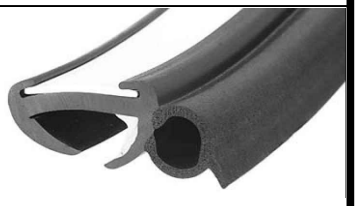

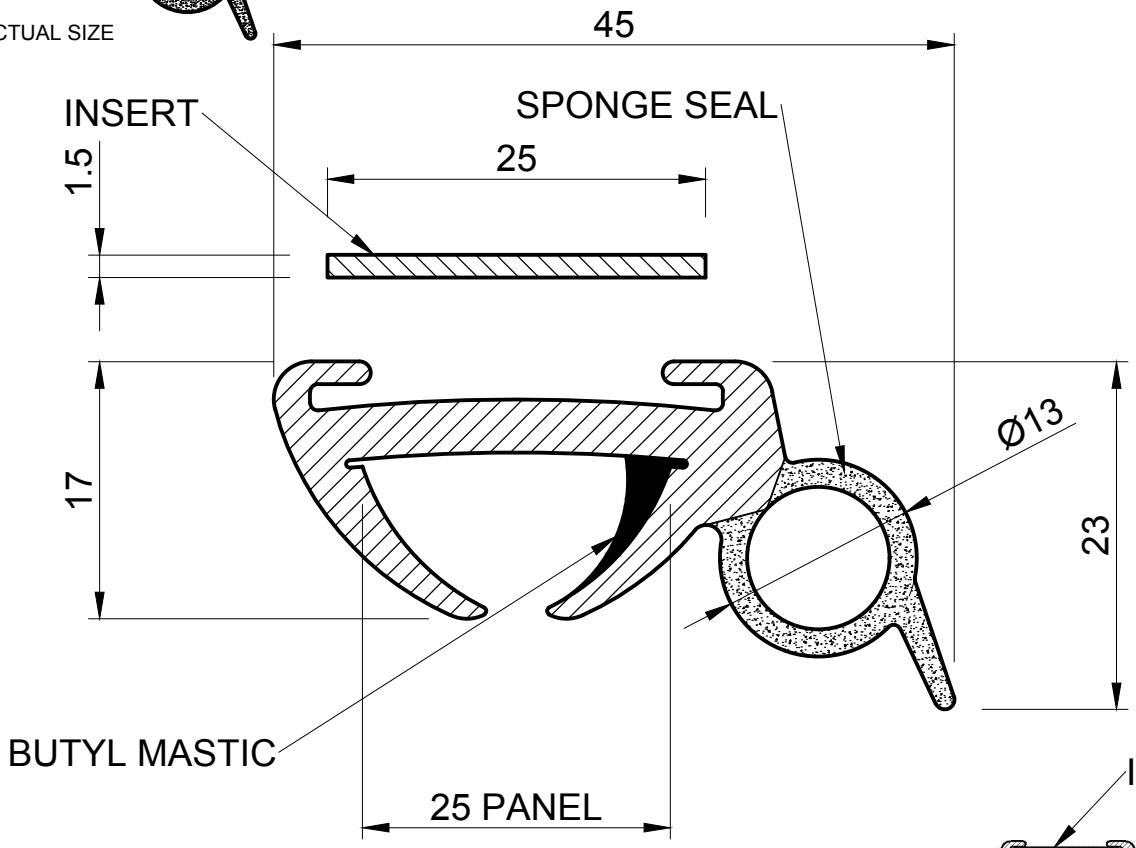


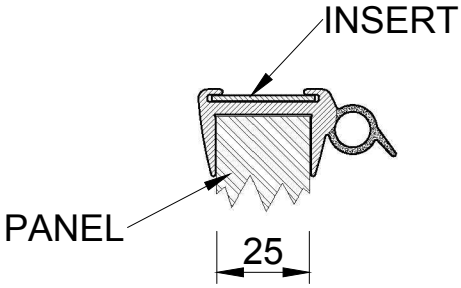


FITTED VIEW
SCALE 1:2

NOTE:

1. SOLD BY THE METRE OR COIL
2. COIL LENGTH 20 METRES
3. WEIGHT 386 GRAMS PER METRE
4. TO FIT A 25MM PANEL
5. COMPLETE WITH WHITE INSERT (CS 868)
6. THIS IS A FLEXIBLE COMPONENT THEREFORE OVERALL DIMENSIONS ARE APPROXIMATE

| MATERIAL (REFER TO OUR DATA SHEET FOR FULL TECHNICAL DATA) | TOLERANCE | ISSUE DATE |
|---|---|---|
| BLACK EPDM 70° SHORE A, SPONGE SEAL, BUTYL MASTIC | TO BS 3734 CLASS E3 | 12.12.16 |


**Seals + Direct Ltd**

Unit 6, Milton Business Centre, Wick Drive, New Milton, Hants, BH25 6RH

**Tel**: 01425 617722 **Fax**: 01425 610967 **E-mail**: sales@sealsplusdirect.co.uk

Reg. No 4989100


SCALE 2 : 1

PROJECTION


This information and our technical advice, whether verbal, in writing or by way of trials, is given in good faith but without warranty. This also applies where proprietary rights are involved. Our advice does not release you from the obligations to check its validity and to test our products as to their suitability for the intended use. The storage, application and use of our products are beyond our control and, therefore, entirely your own responsibility. Our products are sold in accordance with our General Conditions of Sale. The information contained within this drawing is subject to change without notice.


DIMENSIONS IN MM


©SEALS + DIRECT LTD